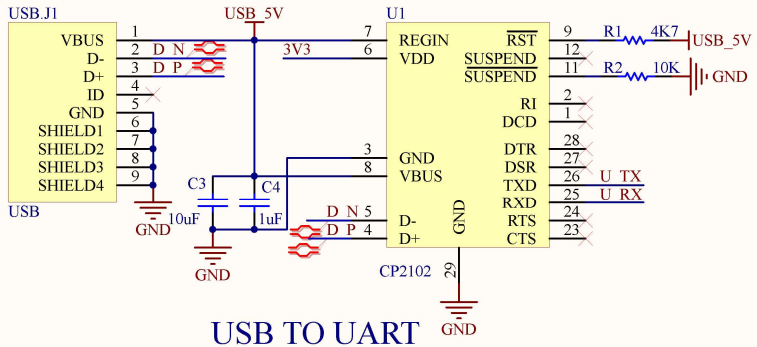

USB TO UART

MAX-XXX GNSS HAT

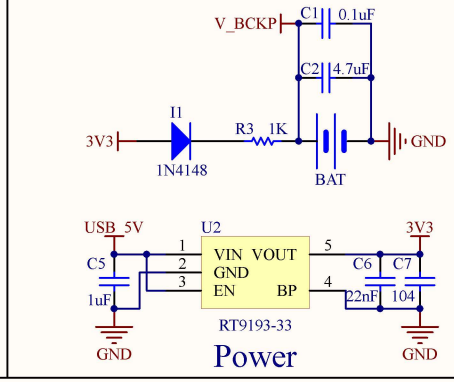

Power

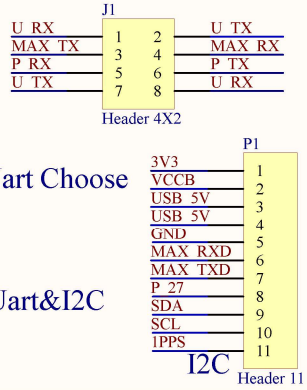

Uart Choose

Uart&I2C

I2C

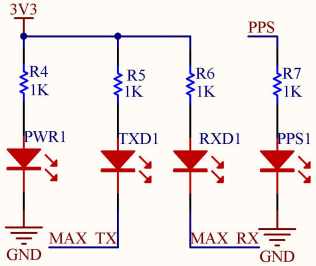

Indicator light

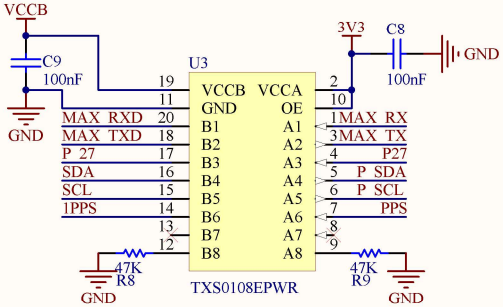

Voltage Level Switch

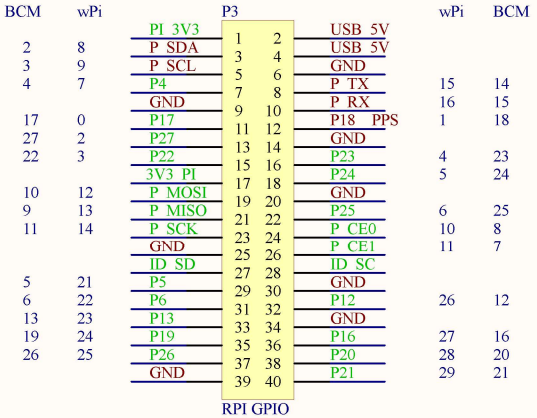

Raspberry Interface

MAX-XX-0

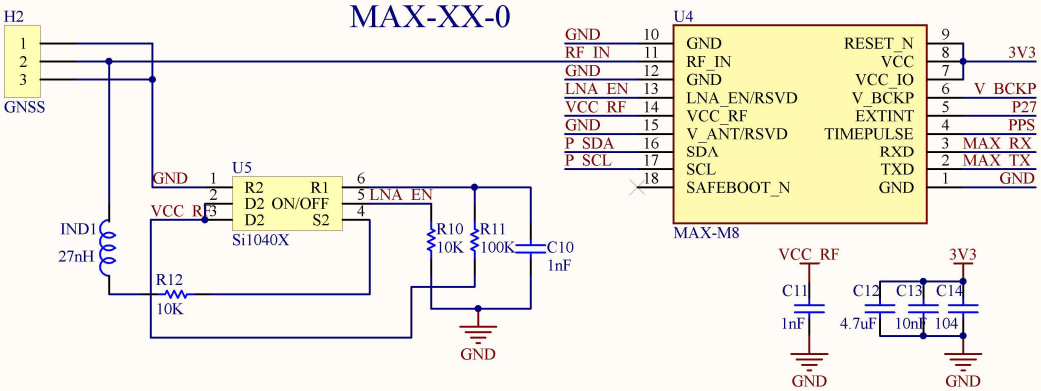

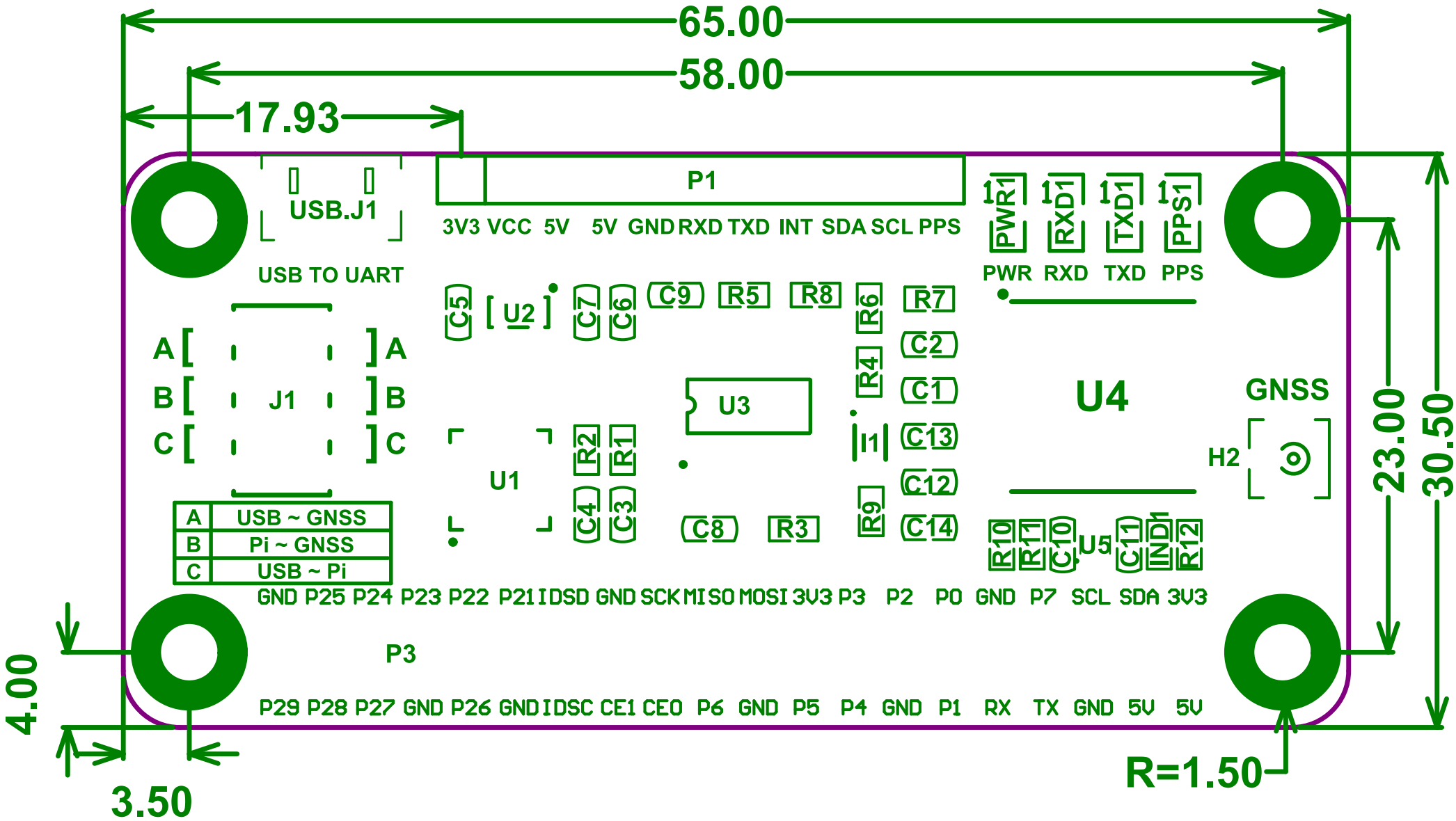
65.00
58.00
17.93
USB.J1
USB TO UART
P1
3V3 VCC 5V 5V GND RXD TXD INT SDA SCL PPS
PWR1 RXD1 TXD1 PPS1
PWR RXD TXD PPS
C5 U2 C7 C6 C9 R5 R8 R6 R7
C2
C1
C13
C12
C14
R4
I1
R9
U3
U4
GNSS
H2
U1
R2 R1
C4 C3
C8 R3
R10 R11 C10 U5 C11 IND1 R12
A B C J1 A B C
A USB ~ GNSS
B Pi ~ GNSS
C USB ~ Pi
GND P25 P24 P23 P22 P21 IDSD GND SCK MISO MOSI 3V3 P3 P2 P0 GND P7 SCL SDA 3V3
P3
P29 P28 P27 GND P26 GND IDSC CE1 CE0 P6 GND P5 P4 GND P1 RX TX GND 5V 5V
23.00
30.50
4.00
3.50
R=1.50

Waveshare
MAX-XXX GNSS HAT
BAT1