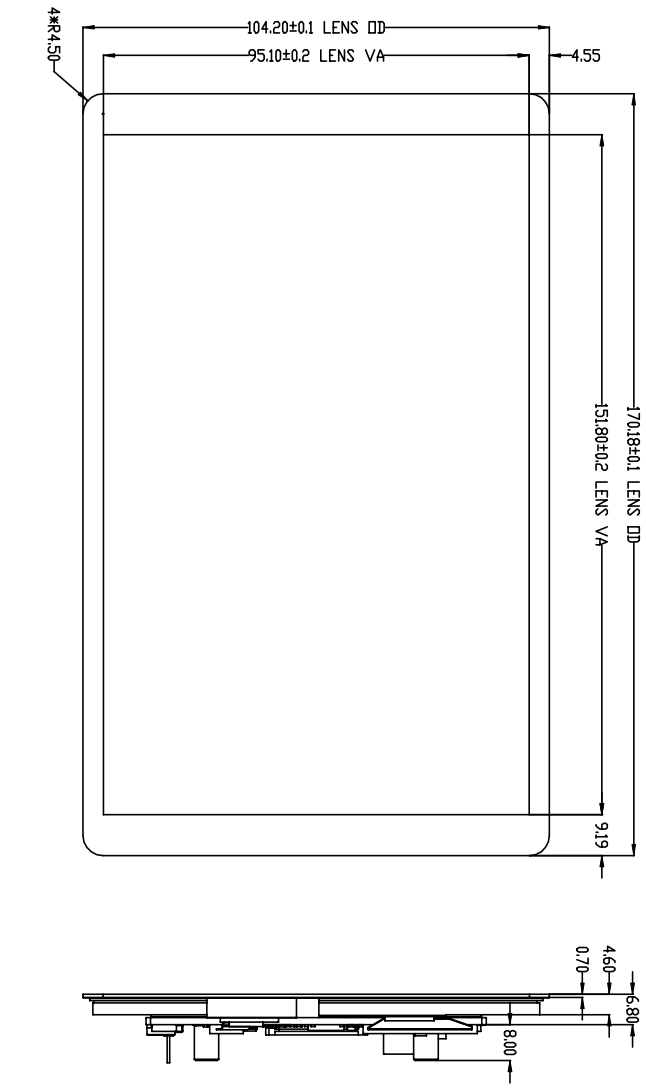
4*R4.50
104.20±0.1 LENS □D
95.10±0.2 LENS VA
4.55
170.18±0.1 LENS □D
151.80±0.2 LENS VA
9.19
0.70
4.60
6.80
8.00

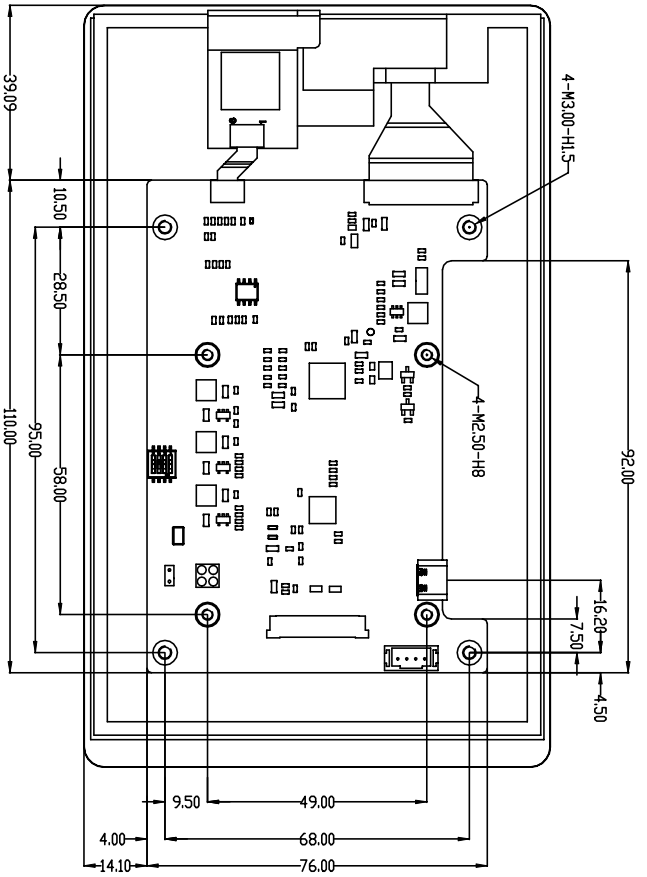
39.09
10.50
28.50
110.00
95.00
58.00
4-M3.00-H1.5
4-M2.50-H8
92.00
16.20
7.50
4.50
9.50
49.00
4.00
68.00
14.10
76.00