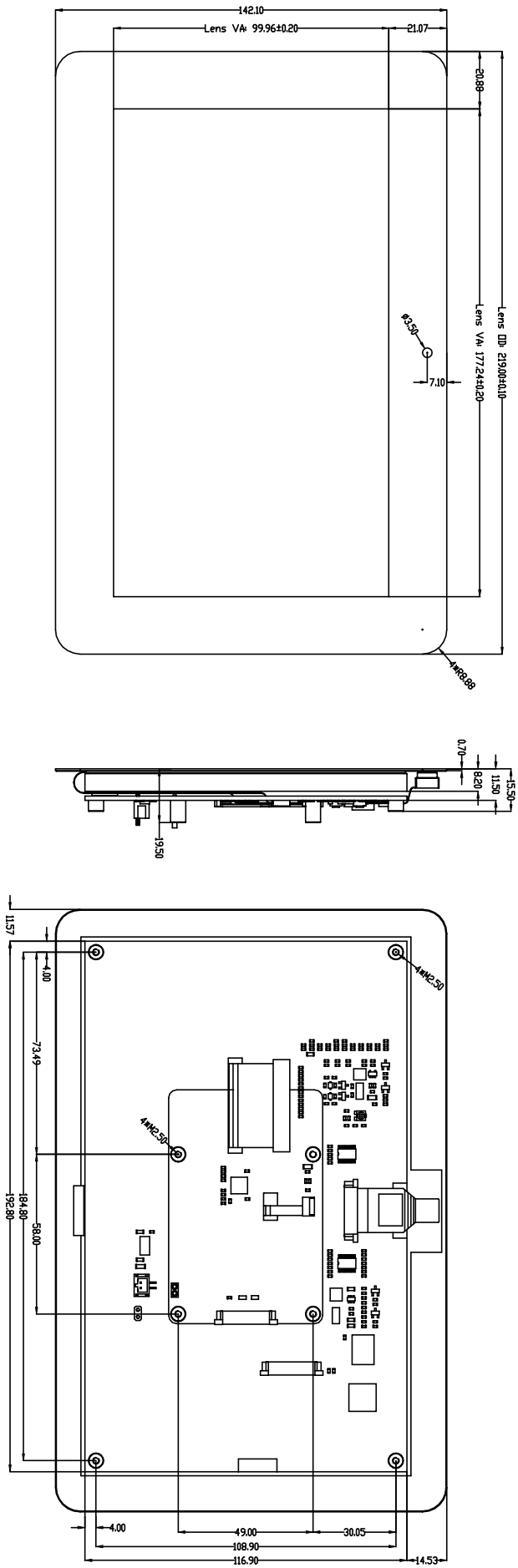
142.10
Lens VA: 99.96±0.20
21.07
20.89
Lens OD: 219.00±0.10
Lens VA: 177.24±0.20
Ø3.50
7.10
4-R8.68
0.70
8.20
11.50
15.50
19.50
11.57
4.00
73.49
184.80
192.80
58.00
4-M2.50
4-M2.50
4.00
49.00
30.05
108.90
116.90
14.53