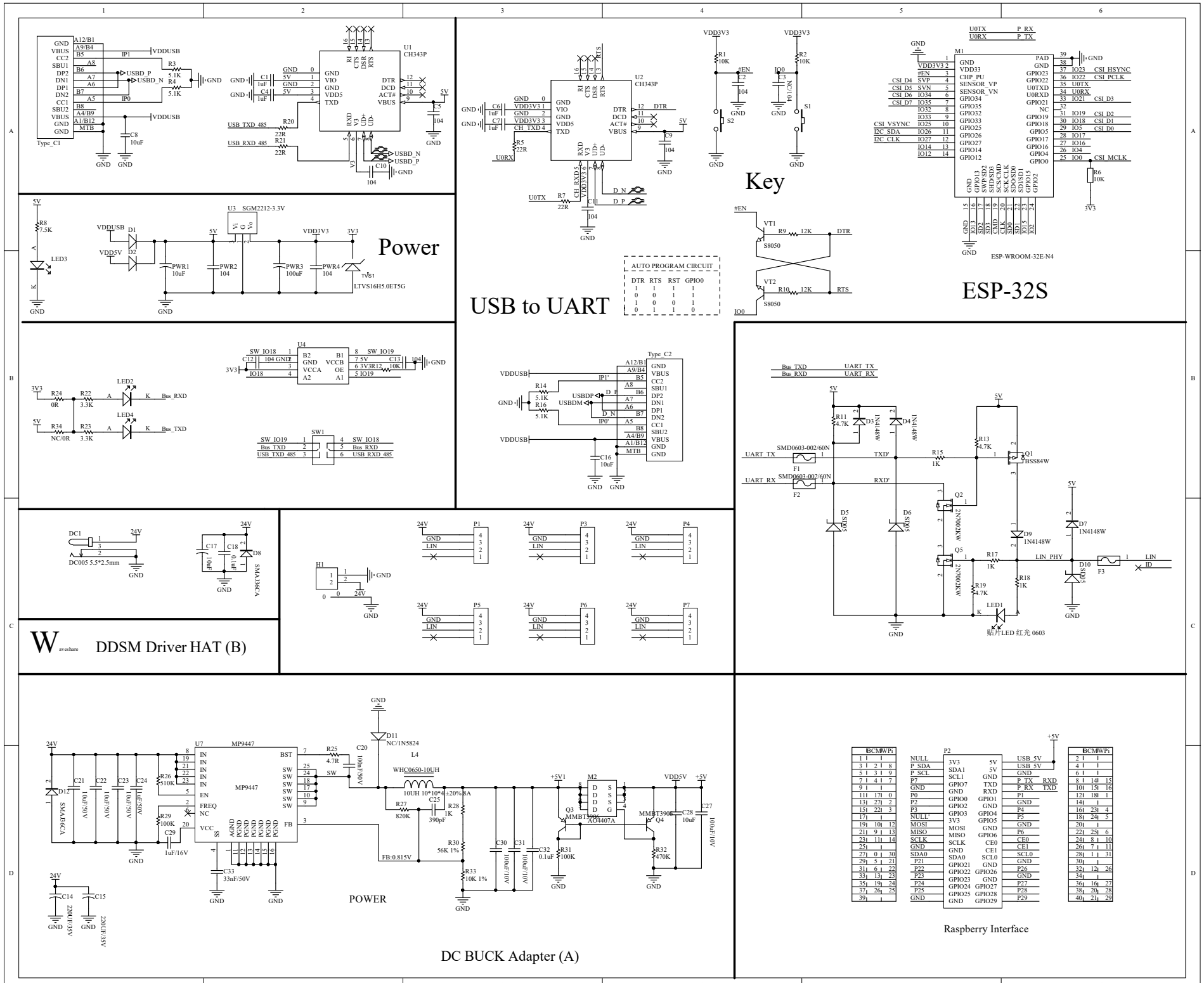
Power
USB to UART
Key
ESP-32S
ESP-WROOM-32E-N4
AUTO PROGRAM CIRCUIT
DDSM Driver HAT (B)
POWER
DC BUCK Adapter (A)
Raspberry Interface