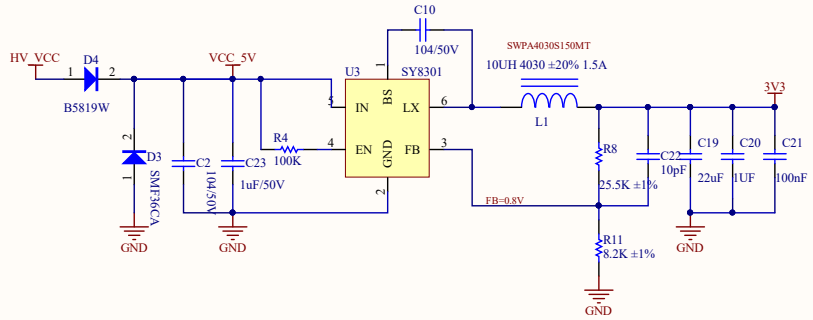

USB

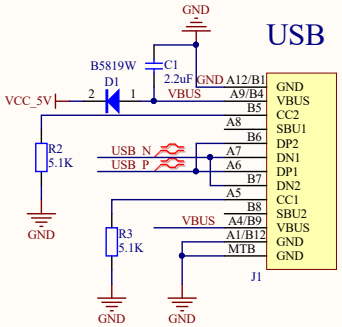

Power

RGB

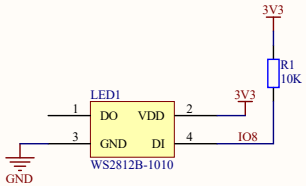

Waveshare
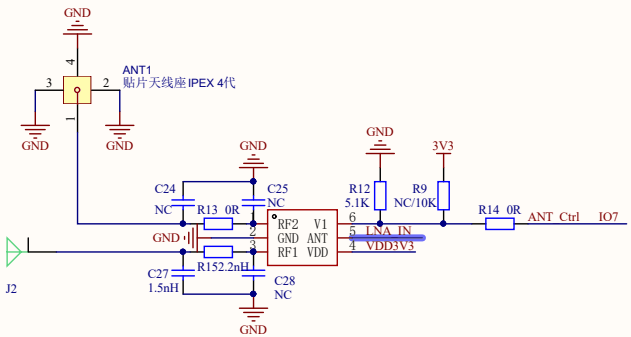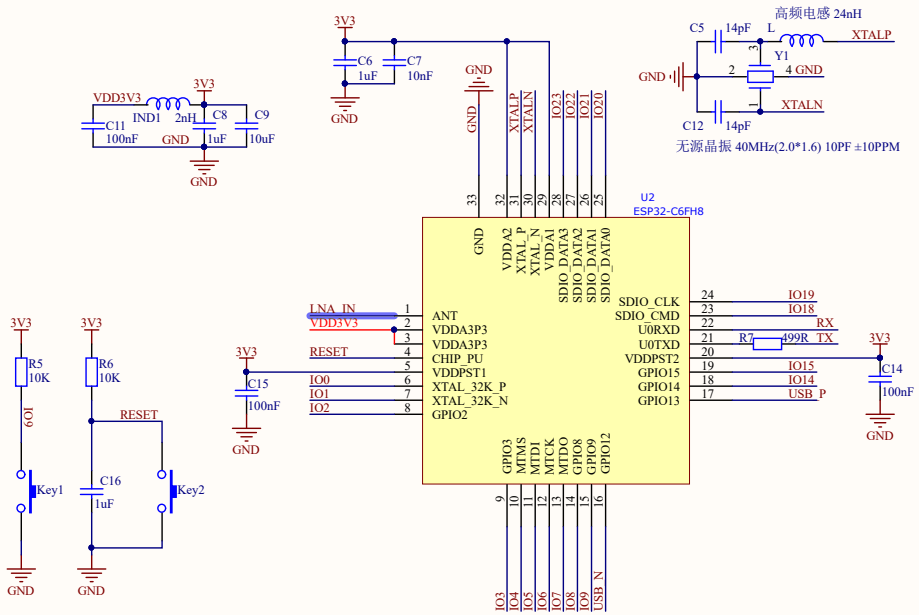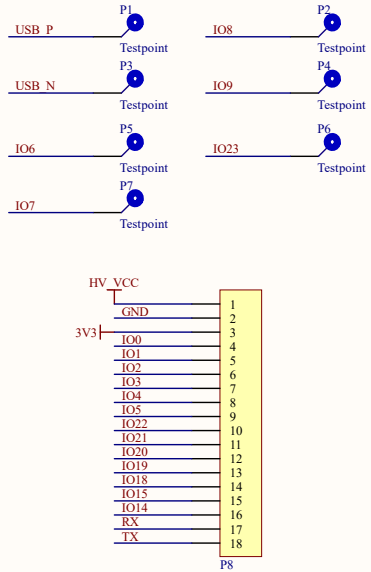
ESP32-C6-Zero-B