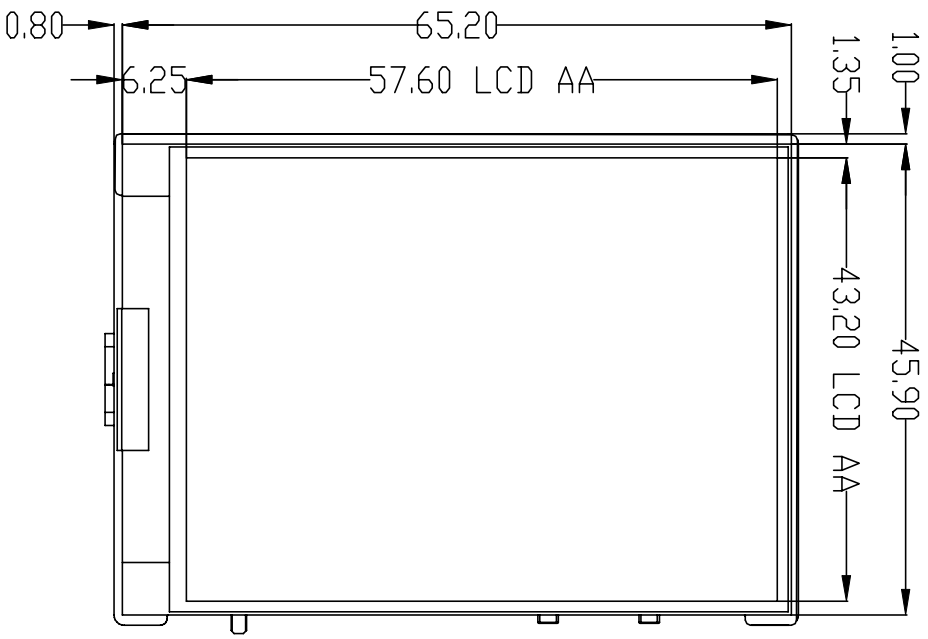
0.80
65.20
6.25
57.60 LCD AA
1.35
1.00
43.20 LCD AA
45.90

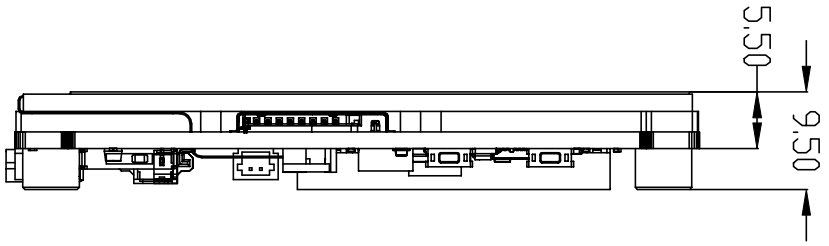
5.50
9.50

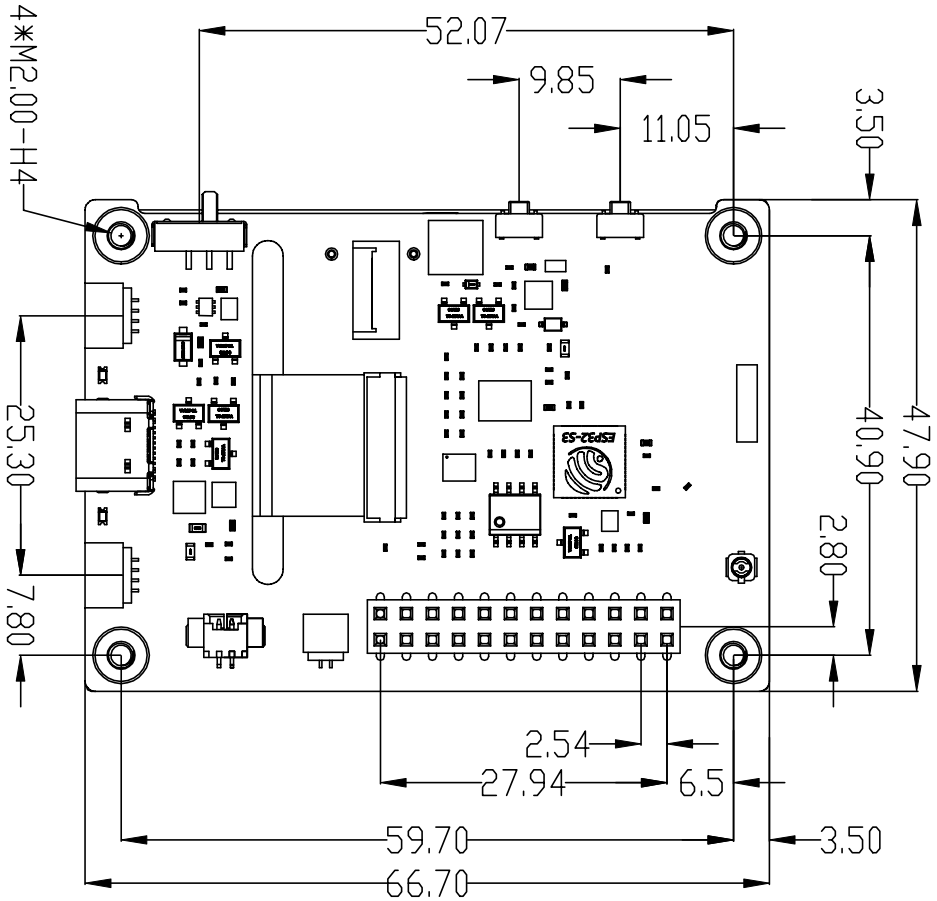
4*M2.00-H4
52.07
9.85
11.05
3.50
25.30
7.80
40.90
47.90
2.80
2.54
27.94
6.5
59.70
3.50
66.70