Power

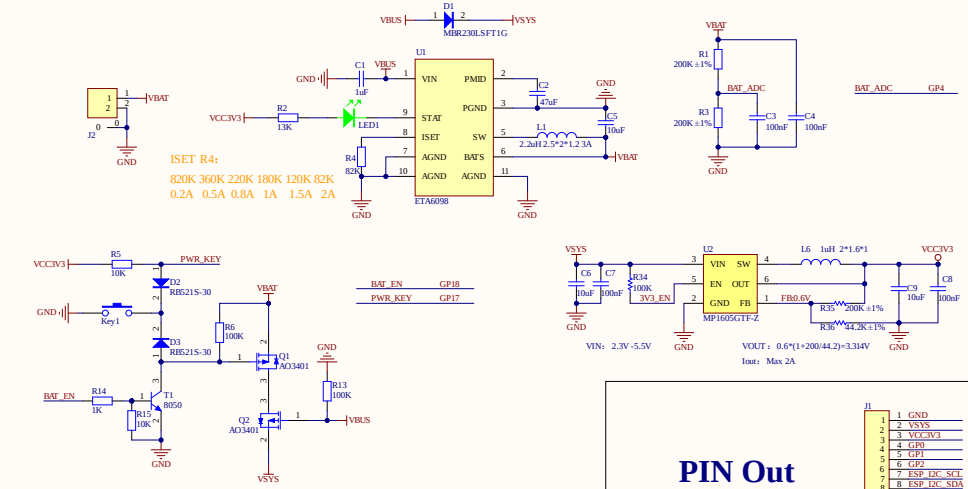

AMOLED_1.32_Port

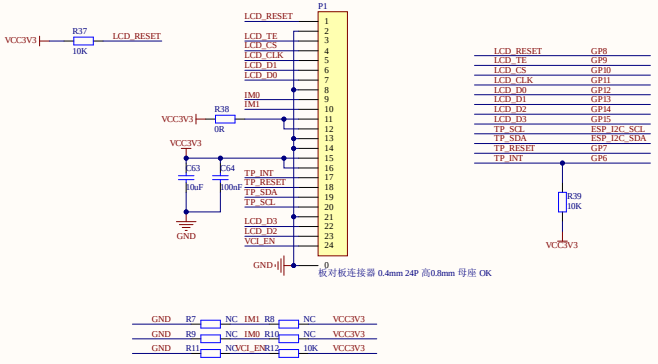

PIN Out

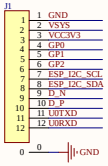

KEY

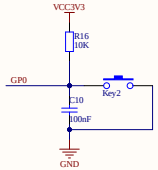

Type-C Interface

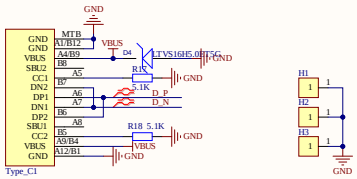

ESP32-S3-Touch-AMOLED-1.32

WROOM-1/2 / IO Expander	AMOLED	Audio	Power	OTS
GP0				
GP1				
GP2				
GP3				
GP4			BAT_ADC	
GP5				
GP6	TP_INT			
GP7	TP_RESET			
GP8	LCD_RESET			
GP9	LCD_TE			
GP10	LCD_CS			
GP11	LCD_CLK			
GP12	LCD_D0			
GP13	LCD_D1			
GP14	LCD_D2			
GP15	LCD_D3			
GP16			Codec_EN	
GP17			PWR_KEY	
GP18			BAT_EN	
GP19				ESP_USB_N
GP20				ESP_USB_P
GP21				
GP38		I2S_MCLK		
GP39		I2S_SCLK		
GP40		I2S_ASDOUT		
GP41		I2S_LRCK		
GP42		I2S_DSDIN		
GPIO43				
GPIO44				
GP45				
GP46		PA_CTRL		
GP47	TP_SDA	Audio_SDA		ESP32_I2C_SDA
GP48	TP_SCL	Audio_SCL		ESP32_I2C_SCL

Codec

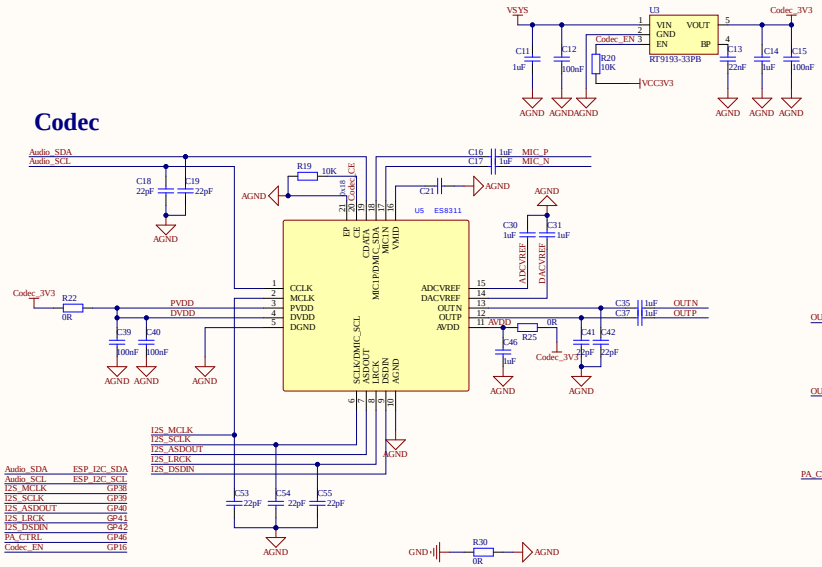

PA&SPEAKER&MIC

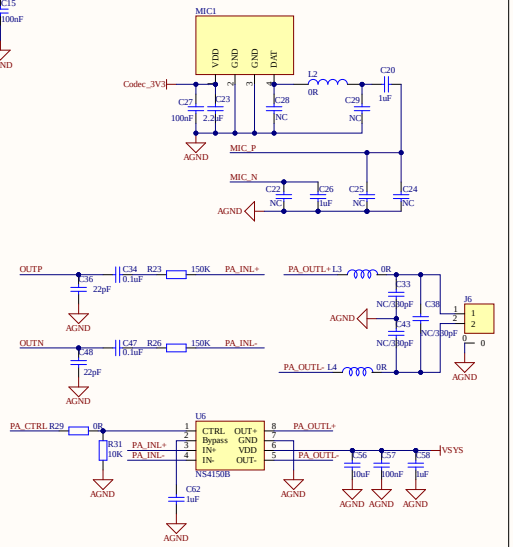
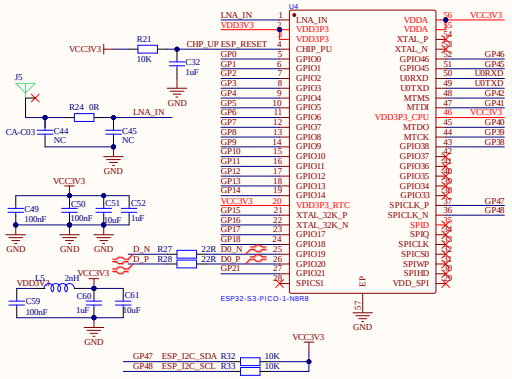
ESP32-S3-PICO-1-N8R8