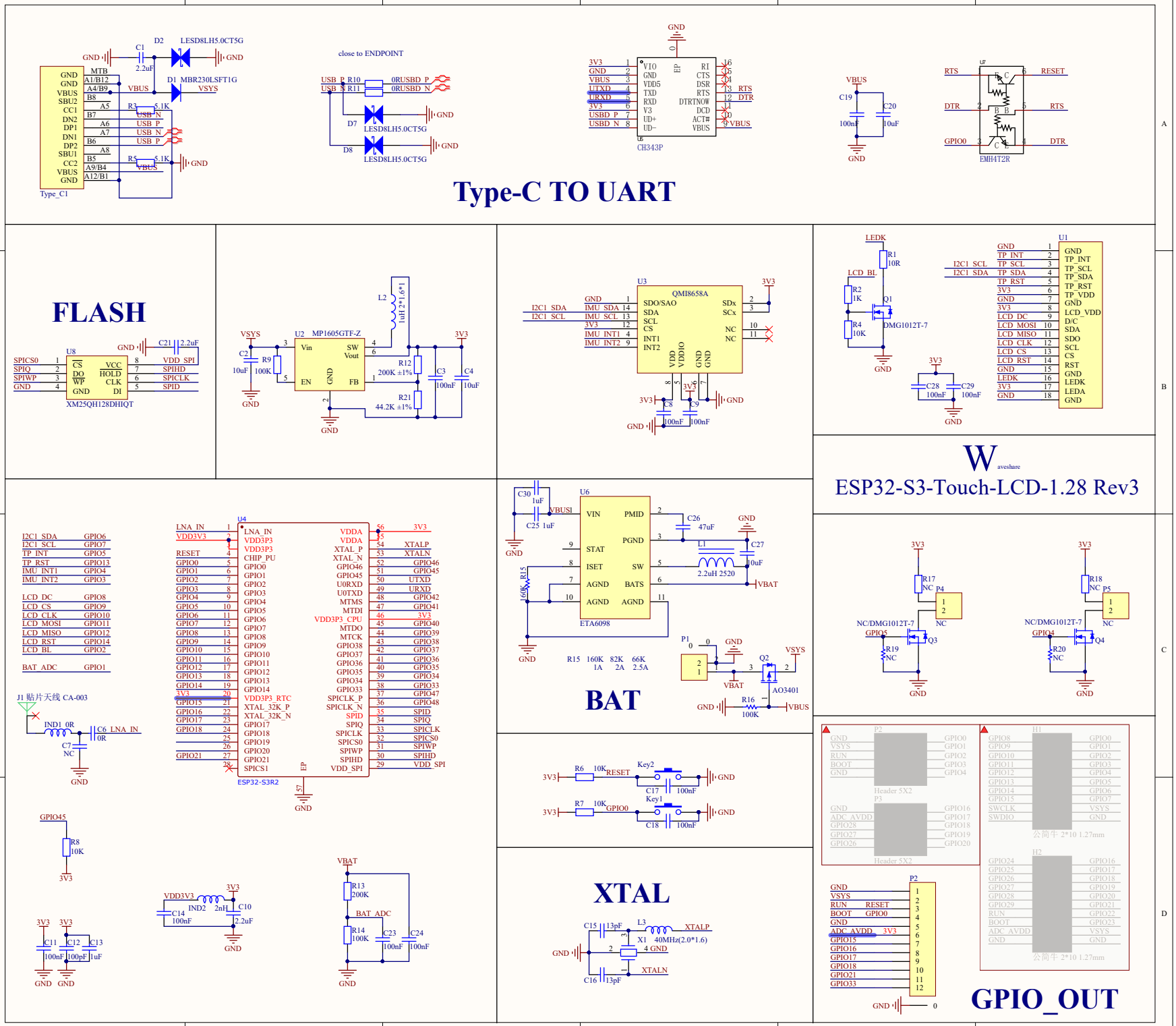
Type-C TO UART
FLASH
BAT
XTAL
GPIO_OUT
ESP32-S3-Touch-LCD-1.28 Rev3
Type_C1
CH343P
EMH4T2R
XM25QH128DHIQT
MP1605GTF-Z
QMI8658A
ETA6098
ESP32-S3R2
close to ENDPOINT
J1 贴片天线 CA-003