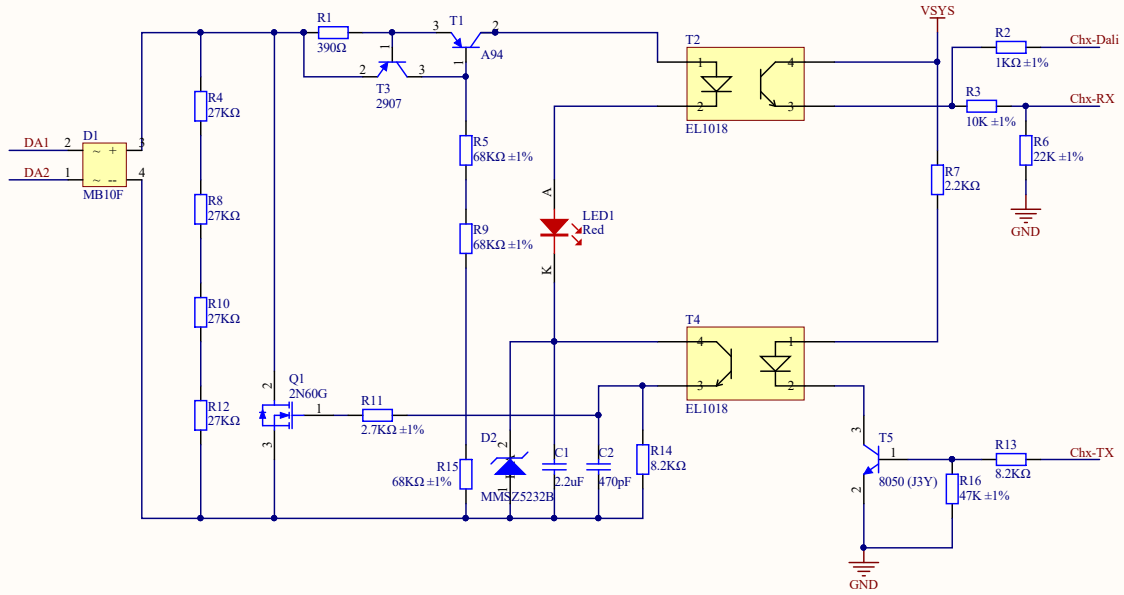

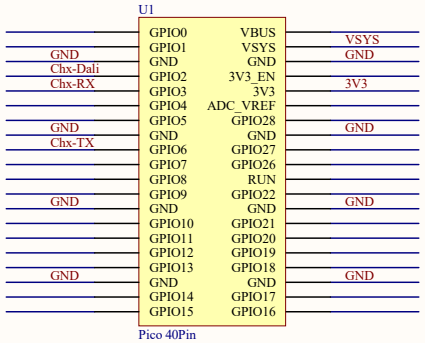

Pico 40Pin

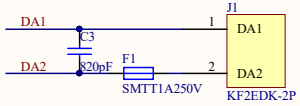

Header

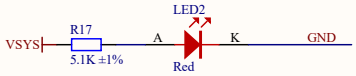

LED

Pico-DALI2

Waveshare