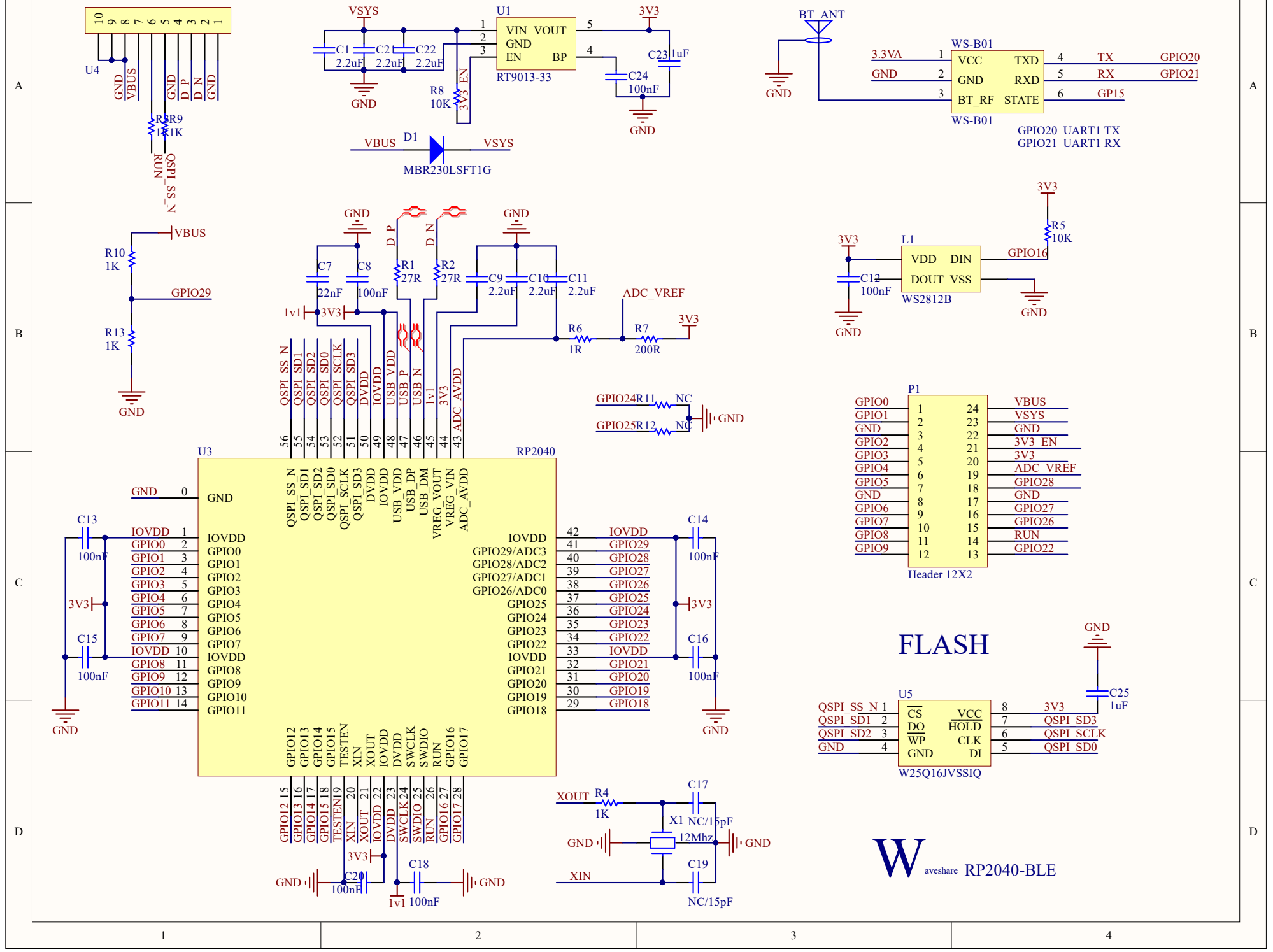

U4
GND
VBUS
GND
D_P
D_N
GND
R3 1K
R9 1K
RUN
QSPI_SS_N
VSYS
C1 2.2uF
C21 2.2uF
C22 2.2uF
U1
VIN VOUT
GND
EN BP
RT9013-33
3V3
C23 1uF
C24 100nF
R8 10K
3V3_EN
D1
MBR230LSFT1G
BT_ANT
WS-B01
3.3VA
VCC
GND
BT_RF
TXD
RXD
STATE
TX
RX
GP15
GPIO20
GPIO21
GPIO20 UART1 TX
GPIO21 UART1 RX
R10 1K
R13 1K
GPIO29
C7 22nF
C8 100nF
R1 27R
R2 27R
C9 2.2uF
C10 2.2uF
C11 2.2uF
1v1
ADC_VREF
R6 1R
R7 200R
R5 10K
L1
VDD DIN
DOUT VSS
WS2812B
GPIO16
C12 100nF
GPIO24R11 NC
GPIO25R12 NC
P1
Header 12X2
U3
RP2040
C13 100nF
C15 100nF
C14 100nF
C16 100nF
FLASH
U5
CS
DO
WP
GND
VCC
HOLD
CLK
DI
W25Q16JVSSIQ
C25 1uF
XOUT
R4 1K
C17 NC/15pF
X1 12Mhz
C19 NC/15pF
XIN
C20 100nF
C18 100nF
Waveshare RP2040-BLE