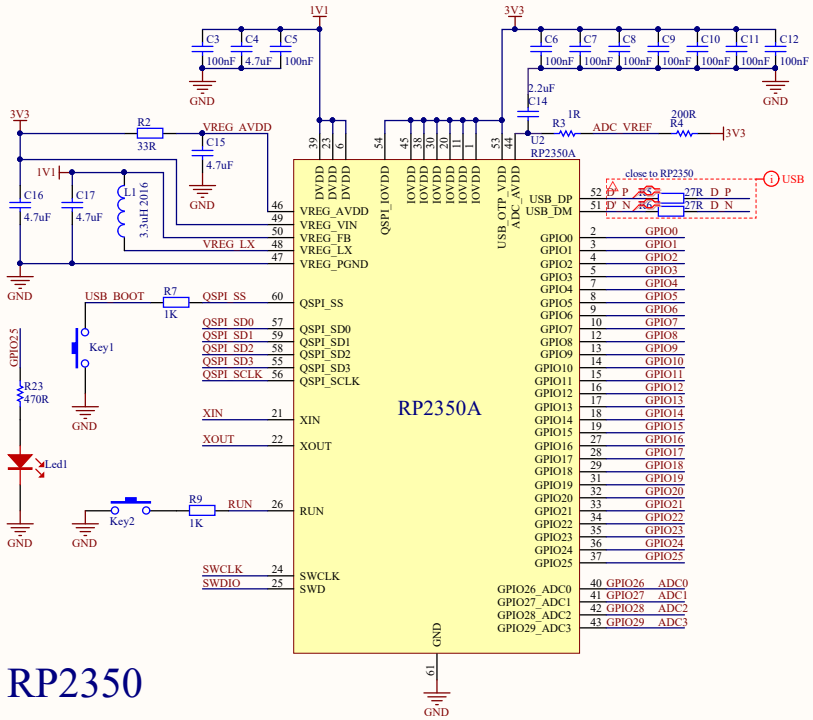

RP2350

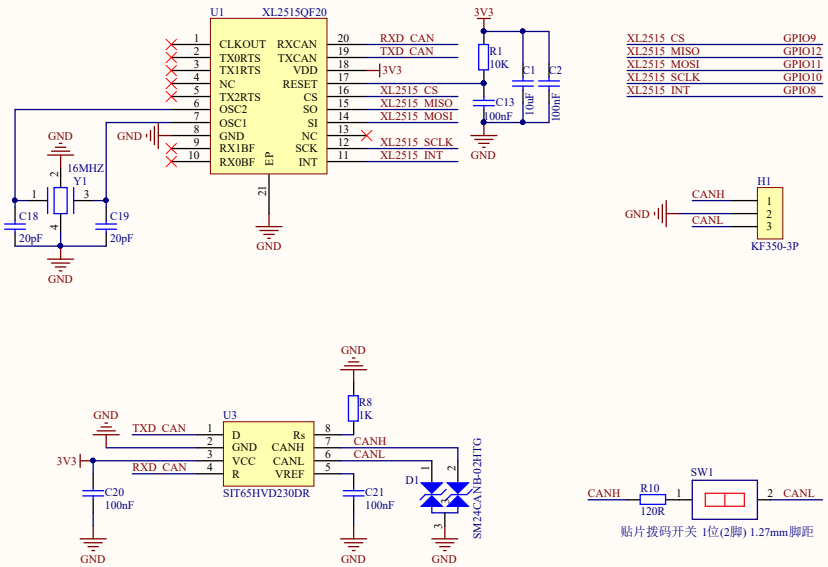

CAN

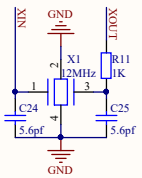

Crystal Oscillator

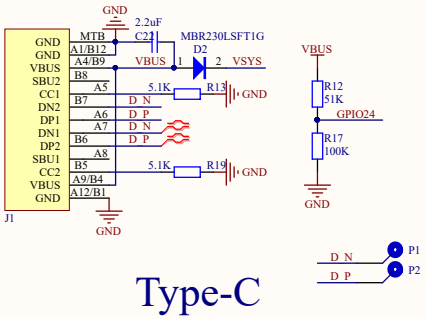

Type-C

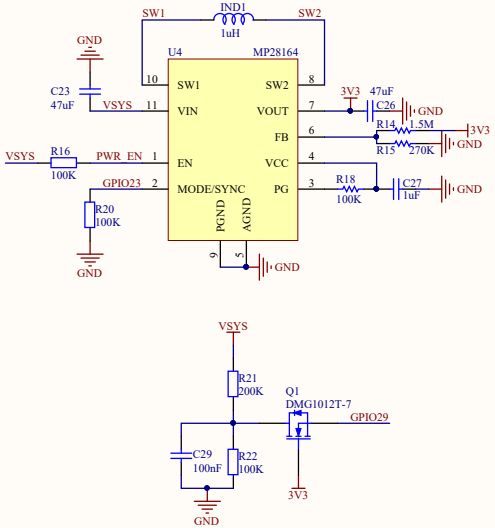

Power

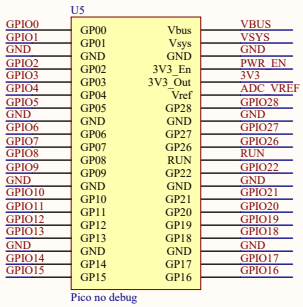

Pin Out

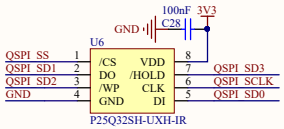

Flash

RP2350A-CAN

W aveshare